core
audio designs
3 RISING ROAD
NOVATO CALIFORNIA 94945

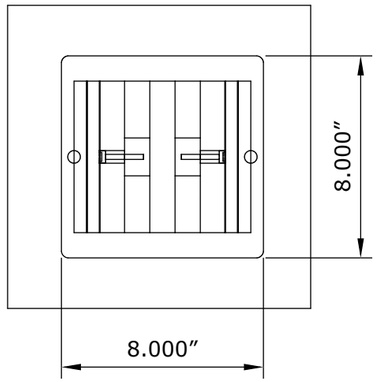

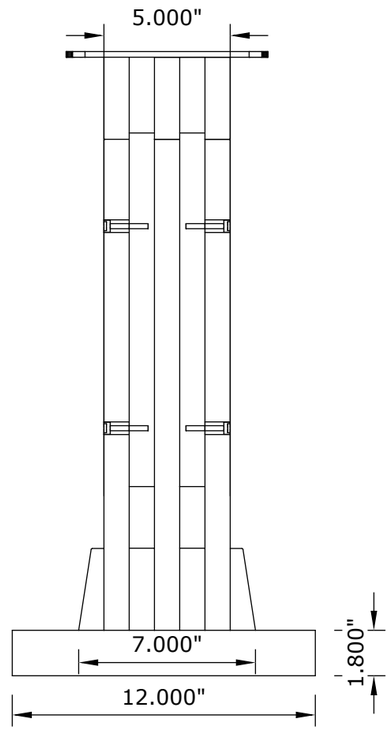

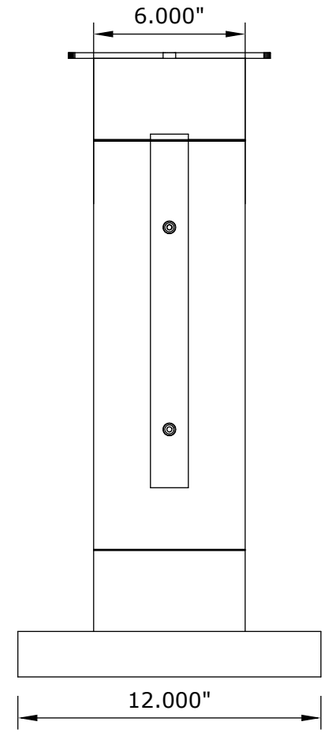

ADJUSTABLE LENGTH

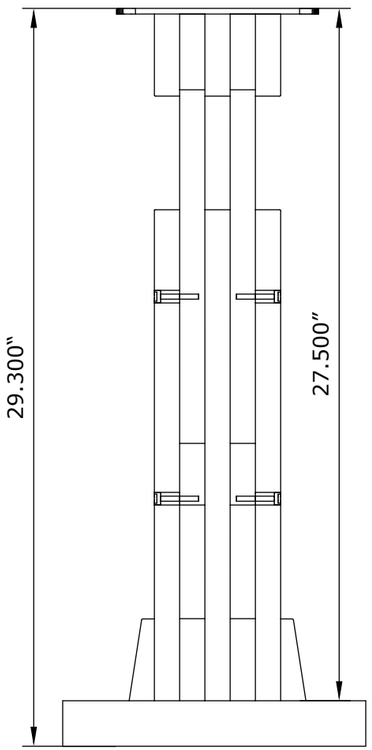

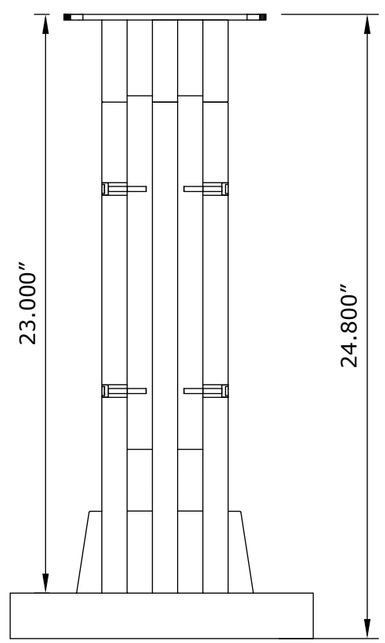

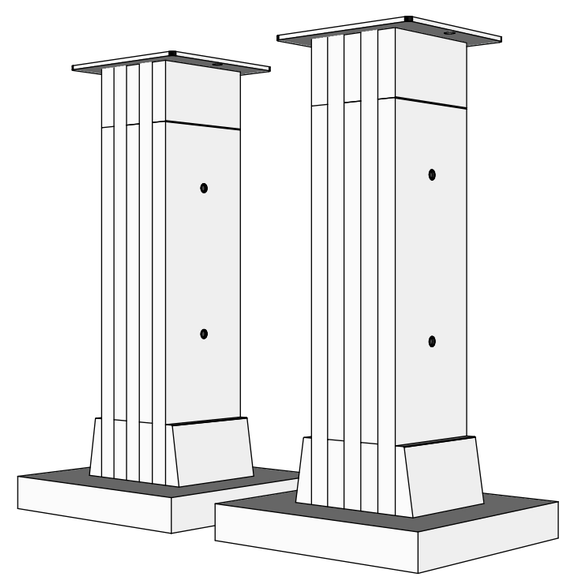

DRAWN BY
EO

ISSUE
12-03-18

REVISED
02-19-19

SCALE, UNLESS NOTED
1″ = 6″

DESCRIPTION
ORTHOGRAPHIC
RISER SPEAKER STANDS